PRODUCT CATALOGUE

- Shaftless Spiral Conveyors
- Screenings, Grit and Sludge Equipment
- Inlet Works Packages

SPIRAC®
Solid Handling Solutions

SPIRAC IS ALL ABOUT SCREENING, GRIT AND BIOSOLIDS HANDLING SOLUTIONS

With SPIRAC solids handling solutions, you can have total confidence in a global leader.

Municipal screening, grit and sludge handling are our primary focus, but SPIRAC also offers conveying, dewatering and washing equipment for industrial applications.

For over 40 years we have been market leaders in shaftless conveyor systems, grit capture and classification as well as inlet works including screening, washing, compaction, containment and transport systems. With offices located around the world, SPIRAC can provide the best solids material handling solutions developed with the benefit of international and local experience. Our diverse product range and experienced team of engineers, offer solutions for the smallest to largest WWTP. We are also major suppliers of sludge silo systems, offering complete design, fabrication and installation services for the efficient, clean and odour free handling of large or small capacity systems.

Most importantly, we support our equipment and take pride in ensuring successful installations.

And don't forget, after sales support is part of SPIRAC's outstanding service.

Your SPIRAC team

SHAFTLESS SPIRAL CONVEYORS

SPIRAC shaftless spiral conveyors are designed for the transport of otherwise difficult to handle materials, such as municipal dewatered sludge, wastewater screenings, grit, industrial sludges or other sticky, viscous, stringy materials.

The SPIRAC shaftless design eliminates the need for intermediate and end bearings and allows higher filling rates and lower RPM's. This results in less wear and consequently less maintenance and down time. Although the spirals can be made of many different materials, our primary special steel from Sweden has mechanical properties which allow us to convey great distances in single troughs.

FEATURES AND BENEFITS

- Low RPM for long life expectancy to wear components = Virtually maintenance free
- Low power usage = Energy savings
- Less wear = Less down time
- Eliminating intermediate and end bearings allow efficient and direct transfer into another conveyor = Space saving
- Handling of large objects, up to trough diameter
- Totally enclosed troughs including fully sealed lids, gasketed joints for tight odour and mess containment
- Direct drive enables long continuous runs on a single gearbox

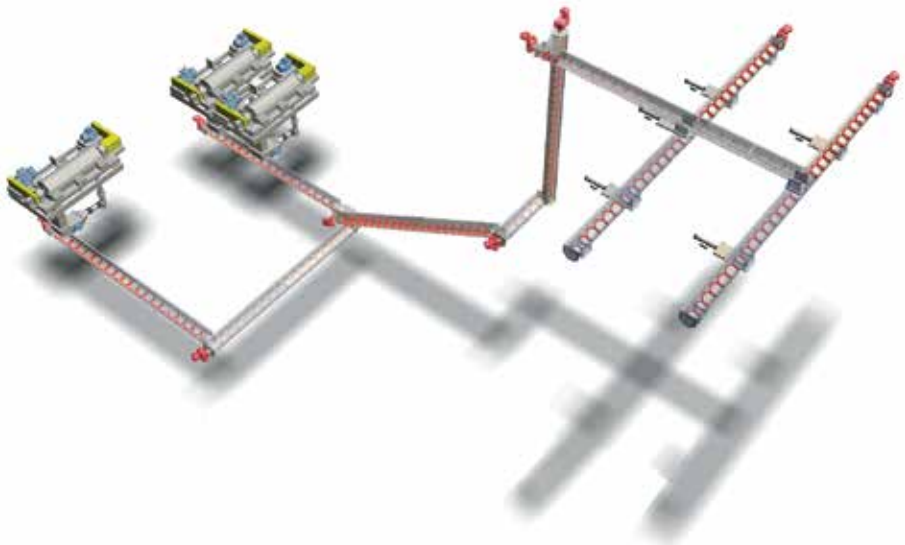

Typical shaftless spiral conveyor layouts and connections

LINER DURAFLO® SPX

SPIRAC's proprietary liner, DURAFLO® SPX, is an ultra-high molecular weight polyethylene with special fillers for abrasion resistance and a low coefficient of friction manufactured with a convenient two color wear indicator. DURAFLO® SPX is designed specifically to ensure long life. The liner has a snap-in, snap-out feature enabling easy replacement, usually without removing the spiral.

Liner cleat & two color liner

SPIROLINE®

SPIROLINE® conveyors use U-troughs and are used for horizontal conveying and inclines up to 30 degrees

- Fully enclosed with bolted or quick release lids and inspection ports
- Commonly stainless steel, also available in mild steel painted, galvanized or FRP/GRP

SPIROLINE® INSTALLATIONS

Long continuous sludge run

Truck outloading system

High capacity sludge outloading system

SPIROLIFT®

SPIROLIFT® uses an octagonal (OK) trough for steep inclines and vertical transport

- Commonly stainless steel, also available in mild steel painted, galvanized or FRP/GRP

SPIROLIFT® INSTALLATIONS

Typical two stage vertical lift sludge conveyors feeding a storage silo

72 degree and 40 degree inclined OK trough sludge conveyors

SCREENINGS SOLUTIONS

SPIRAC supplies solutions that can consist of a standalone unit, or a complete screening material handling system consisting of screens, conveyors, washers, dewaterers and SPIROTAINERs®.

COARSE SCREENS

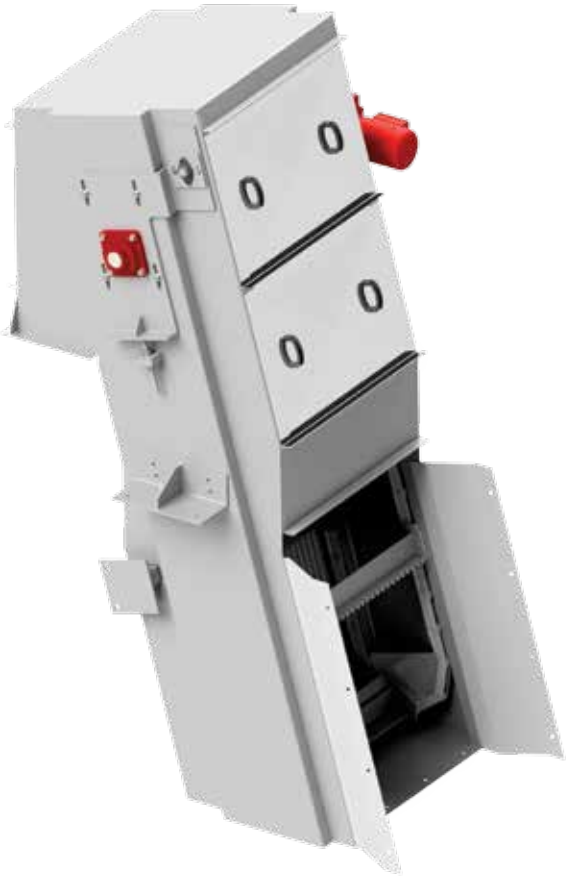

MULTIGUARD™

MECHANICALLY RAKED BAR SCREEN

MULTIGUARD™ removes large debris from wastewater. It is the first cleaning stage in municipal and industrial wastewater treatment plants and protects equipment downstream. The cleaning elements are comb plates which are fixed to the carrier beams. The beams are connected to two strands of chains that can easily be adjusted to suit different requirements.

FEATURES AND BENEFITS

- Suitable for channels up to 4m wide and up to 12m deep
- Available bar gaps 6mm to 50mm
- Maximum flow up to 4000l/sec
- Total screening capture efficiency approximately 20 to 50%
- No washwater required

MULTIGUARD™ screens installation

Comb sample

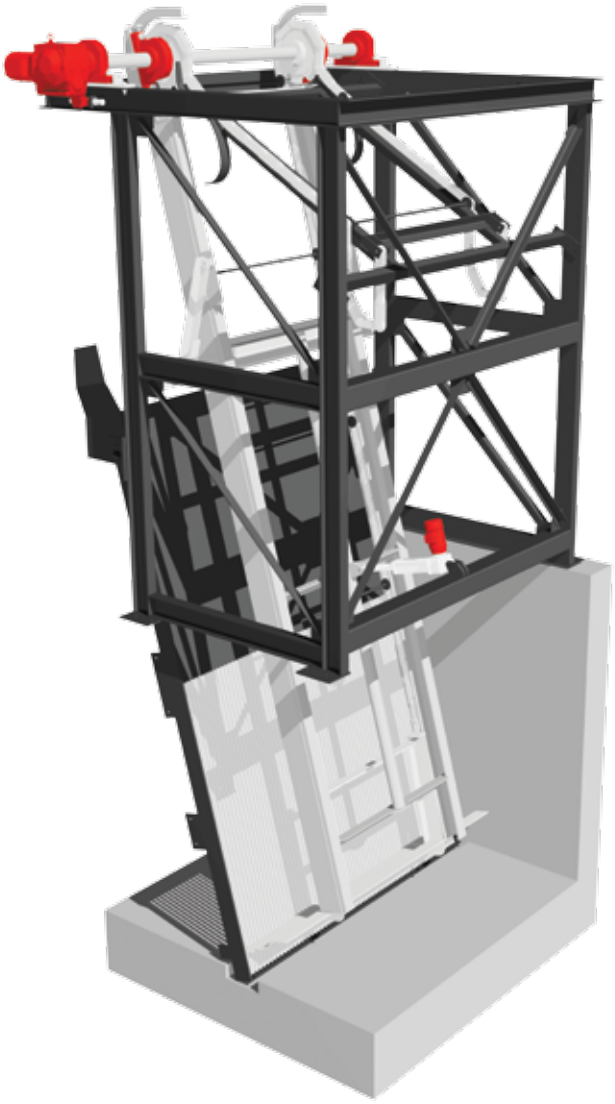

RAKEGUARD™

MECHANICALLY RAKED BAR SCREEN

RAKEGUARD™ is a robust front raked bar screen which is well suited to raw sewage applications. The screen can be used the screen can be used in municipal and industrial wastewater applications where large debris is expected. With the RAKEGUARD™ wastewater passes through the grid and captured screenings are removed by a chain operated rake that moves up the face of the grid. RAKEGUARD™ is able to detect large objects to keep the screen operational. Any unusual obstruction will signal the screen motor to lift the rake clear of the obstruction.

FEATURES AND BENEFITS

- Screen can be used for channels from 1m up to 3m wide, and up to 5m deep
- Smallest available bar gaps 10mm
- Maximum flow up to 2500l/sec
- Total screening capture efficiency 20% to 50%
- Most common installation angle 75° to horizontal
- Very low headloss - high separation efficiency
- Chains pass around a wear resistant guide track at the bottom of the screen which removes the need for sprockets and bearings in the flow
- No washwater required

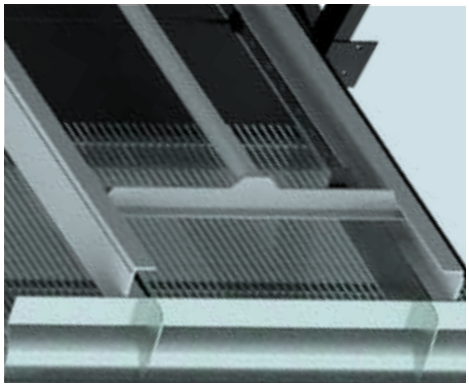

RAKEGUARD™ Comb

FINE SCREENS

BANDGUARD™

CENTRE FLOW BAND SCREEN

BANDGUARD™ is a high efficiency dual flow traveling fine screen used in inlet works of wastewater treatment plants. The exceptional capture rate significantly reduces maintenance costs of downstream equipment. Screening is achieved by passing the sewage through a vertical band-shaped screen curtain. It comprises an assembly of Ultra-high molecular weight polyethylene (UHMWPE) perforated panels, clipped and fastened into stainless steel frames which are fastened to stainless steel conveyor chains, that form two endless loops.

FEATURES AND BENEFITS

- Channels up to 4m width and up to 20m in depth
- Suitable for flows from 40l/sec up to 5,250l/sec
- 2mm to 6mm perforated panels are available
- Thickness and durability of the polypropylene panels minimize carry over and hair-pinning
- Highest screen capture ratios (SCR) of any screen in the world:
  - 2mm ∅ perforated panel has an estimated SCR from 95% to 98%
  - 3mm ∅ perforated panel has a certified average SCR of 95% [UK Water Industry Research (UKWIR) National Screen Evaluation Facility (NSEF) certificate]
  - 5mm ∅ perforated panel has an estimated SCR from 88 to 89%
  - 6mm ∅ perforated panel has a certified average SCR of 85% [UKWIR - NSEF certificate]
- Available with integral washing compactor
- Highly efficient side sealing system
- Maintenance can be undertaken above the channel
- Complete aftermarket support available

BANDGUARD™ installation

Wastewater flow path

Spray bar to clean panels

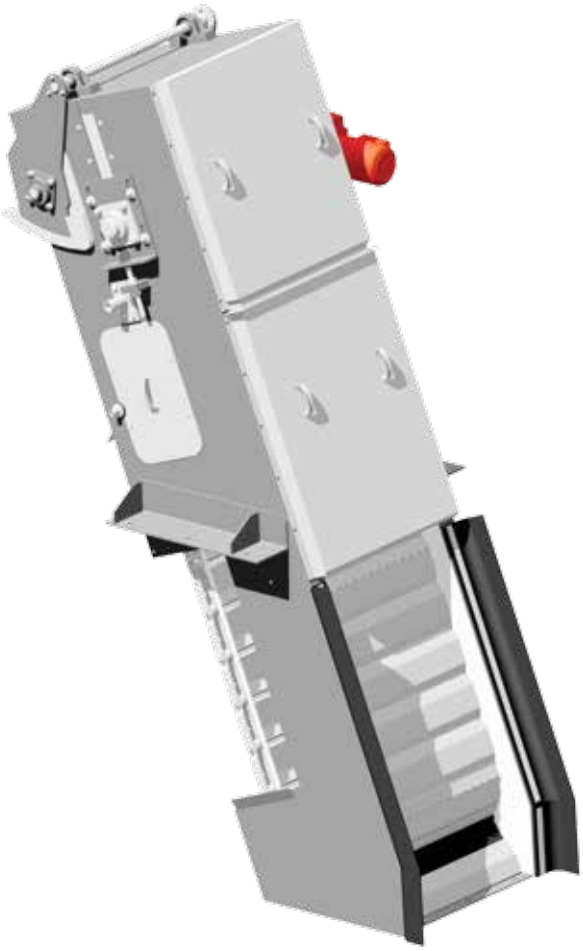

FINEGUARD™

MOVING FINE SCREEN

FINEGUARD™ is utilised for fine screening and removes suspended solids. It is commonly installed in inlet works downstream after coarse screen and prevents clogging and damaging components downstream. The FINEGUARD™ screen can be customised to suit a wide range of applications. The screen continually moves panels, from the screening zone, in the channel to the cleaning mechanism where the waste is removed from the perforated panels.

FEATURES AND BENEFITS

- FINEGUARD™ can be designed to suit channel widths of up to 3m and up to 4m in depth
- Available with 3mm to 6mm diameter perforated screen panels.
- Suitable for flows from 40l/sec up to 2,500l/sec
- Two stage cleaning of screen media - including a rotating self adjusting brush and water jets, that requires only a low volume of wash water
- Fully retractable spray bar - allows for easy access
- Reliable and durable side sealing system made from wear resistant ultra-high molecular weight polyethylene (UHMWPE)
- High screen capture ratios (SCR) to comparable screens:
  - 3mm diameter (∅) perforated panel has a certified average SCR of 89% [UK Water Industry Research (UKWIR) - National Screen Evaluation Facility (NSEF) certificate]
  - 5mm ∅ perforated panel has an estimated SCR of 83 to 84%
  - 6mm ∅ perforated panel has a certified average SCR of 81% [UKWIR – NSEF certificate]
- Complete aftermarket support available

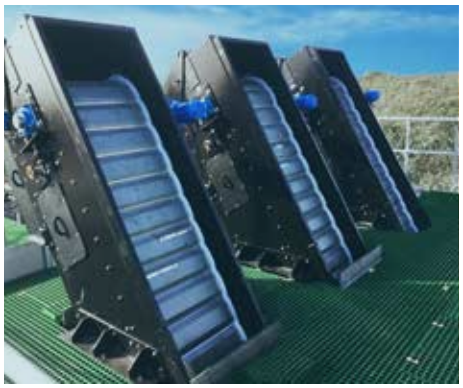

FINEGUARD™ installation

Wastewater flow path

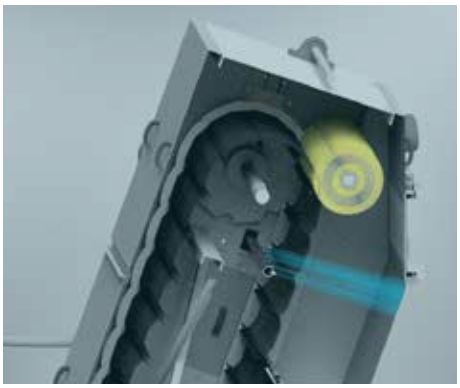

Two stage cleaning process

SPIROGUARD® Compact Cleaner (CC)

SPIRAL SCREEN

The SPIROGUARD® CC Screen is designed as a standalone unit for pumpfed applications and is available with or without a press head. Ideally suited as a tanker reception facilitator screening separation unit, it is robust and easy to install. Slow-speed combined with automatic intermittent operation ensures a reliable and efficient system.

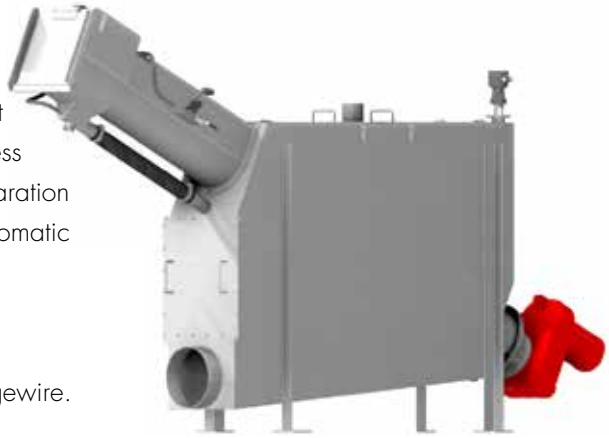

FEATURES AND BENEFITS

- Aperture 2mm to 6mm perforated holes and 1mm to 3mm wedgewire.
- Hydraulic flow up to 300l/sec
- Standard and custom designs to suit client/site specific requirements
- Shaftless spiral that do not require a centre-pipe, intermediate or end bearings - thus minimising any potential for undesired blockages
- Space saving prefabricated solution with minimal civil works and installation time
- Unique pushing drive configuration with adjustable back pressure settings [with optional compaction head]
- Volume reduction typically 35% to 65% [CCP type]
- Dry solids (DS) content typically 35 to 45% [CCP type]
- Low capital cost, low power consumption, few moving parts - therefore low maintenance and operating cost
- High screen capture ratio's; [perforated screen media]:
  - 2mm ∅ @ 75% to 83% screen capture ratio (SCR) estimated.
  - 3mm ∅ @ 75% SCR [UK Water Industry Research (UKWIR) National Screen Evaluation Facility (NSEF) certificate].
  - 5mm ∅ @ 59% to 60% SCR estimated.
  - 6mm ∅ @ 52% SCR [UWKIR - NSEF certificate].
- Manufactured in Europe - utilising maximum European content
- Complete aftermarket support available

SPIROGUARD® compaction head

Compaction head screenings results

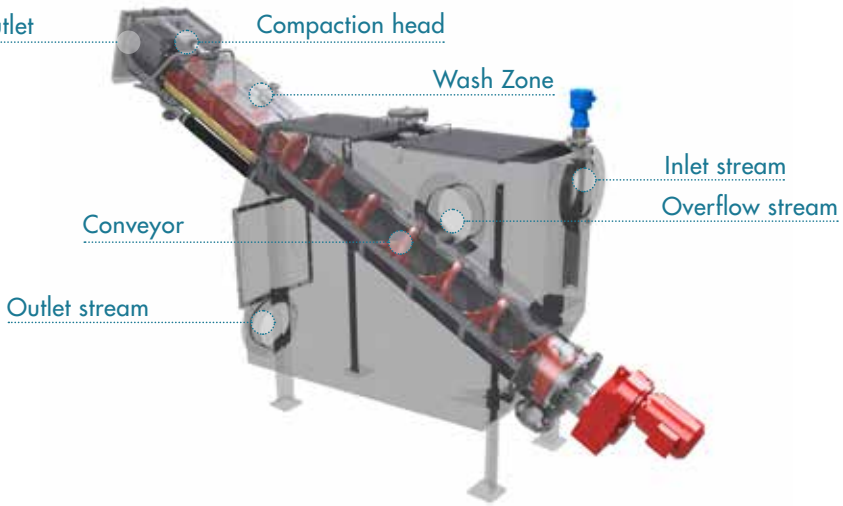

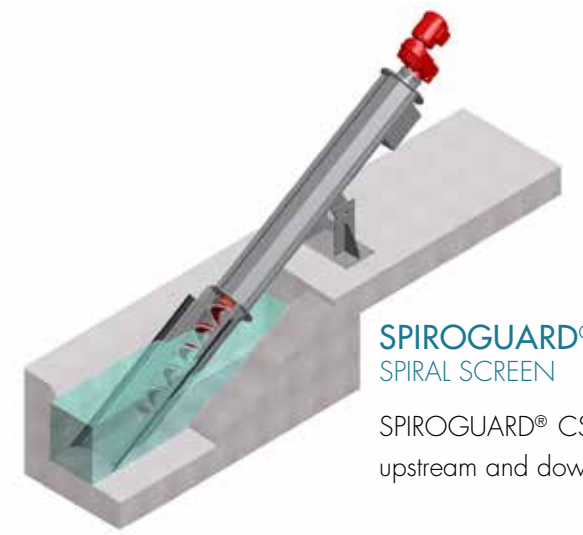

SPIROGUARD® Channel Screen (CS)

SPIRAL SCREEN

SPIROGUARD® CS Screens can be installed for a variety of flow rates and upstream and downstream water levels.

FEATURES AND BENEFITS

- The screens can be used in channels from 0.33m to 0.8m wide
- Aperture 2mm to 6mm perforated holes and 1mm to 3mm wedgewire
- Hydraulic flow up to 500l/sec
- Standard and custom designs to suit client / site specific requirements
- Shaftless spiral that do not require a centre-pipe, intermediate or end bearings – thus minimising any potential for undesired blockages
- Low capital cost, low power consumption, few moving parts – therefore low maintenance and operating cost
- Screen capture ratios (SCR) for perforated screen media:
  - 2mm diameter (∅) has an estimated SCR of 75% to 83%
  - 3mm ∅ has a certified SCR of 75% [UK Water Industry Research (UKWIR) - National Screen Evaluation Facility (NSEF) certificate]
  - 5mm ∅ has an estimated SCR of 59% to 60%
  - 6mm ∅ has a certified SCR of 52% [UKWIR – NSEF certificate]
- Manufactured in Europe - utilising maximum European content
- Complete aftermarket support available

SPIROGUARD® CS installation

Two SPIROGUARD® CS units

SCREENINGS WASHING & DEWATERING

SPIROWASH®

SEWAGE SCREENINGS, WASHING AND DEWATERING

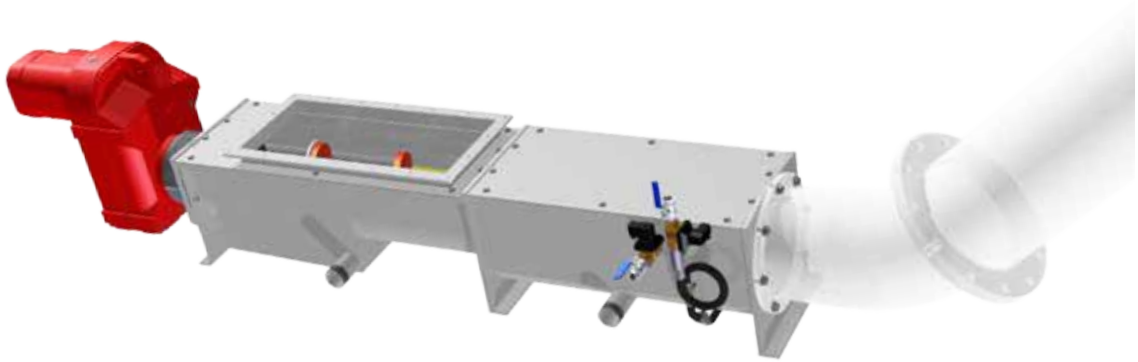

SPIROWASH® represents a range of machines available to handle raw screenings. SPIROWASH® Compact and High Flow are ideal for mild washing, dewatering and compaction of wet screenings in municipal waste water applications. SPIROWASH® High Impact is used when intense washing, dewatering and compaction of wet screenings is required.

FEATURES AND BENEFITS

- Tolerant to high grit and fat loadings, therefore very reliable under difficult conditions
- Low RPM, high torque and low power usage
- Typically up to 90% organic removal
- Dewatered final product; typically, 35% to 45% dry solids content
- Volume reduction; typically, 45% to 85%
- Low capital cost, low power consumption, few moving parts - therefore low maintenance and operating cost
- Manufactured in Europe - utilising maximum European content
- Complete aftermarket support available

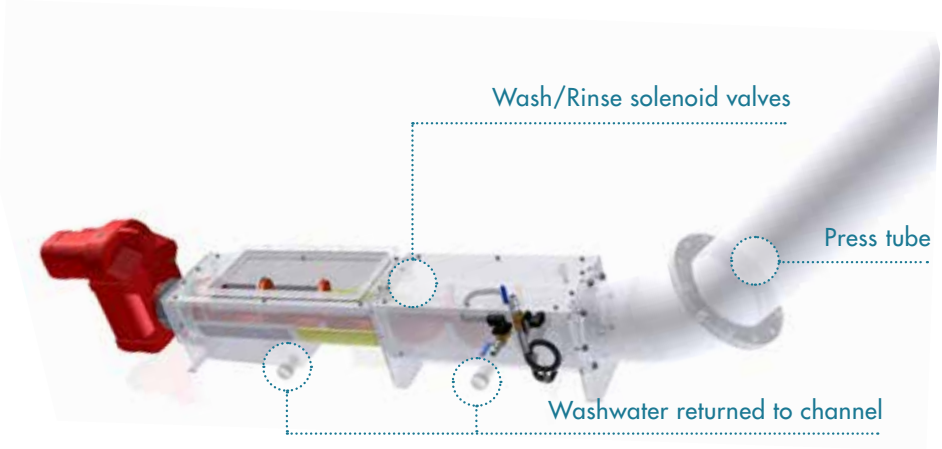

SPIROWASH® *installation*

SPIROPRESS®

CONVEYING, COMPACTING AND DEWATERING

SPIROPRESS® is a simple yet effective dewaterer that combines conveying, dewatering and volume reduction in one compact unit. SPIROPRESS® is a conveyor with a press zone at one end which makes long conveying and simultaneous dewatering an ideal systems solution. It has a capacity up to 30m³/hr dependant on actual site conditions.

FEATURES AND BENEFITS

- Shaftless spiral that does not require a centre-pipe, intermediate or end bearings, thus minimising any potential for undesired blockages
- High fill factors, low RPM - high torque and low power usage
- Adjustable pressure plate for optimum dewatering performance
- Dewatered final product; typically, 35% to 45% dry solids content
- Volume reduction; typically, 40% to 80%
- Low capital cost, low power consumption, few moving parts - therefore low maintenance and operating cost
- Manufactured in Europe - utilising maximum European content
- Complete aftermarket support available

SPIROPRESS® installation

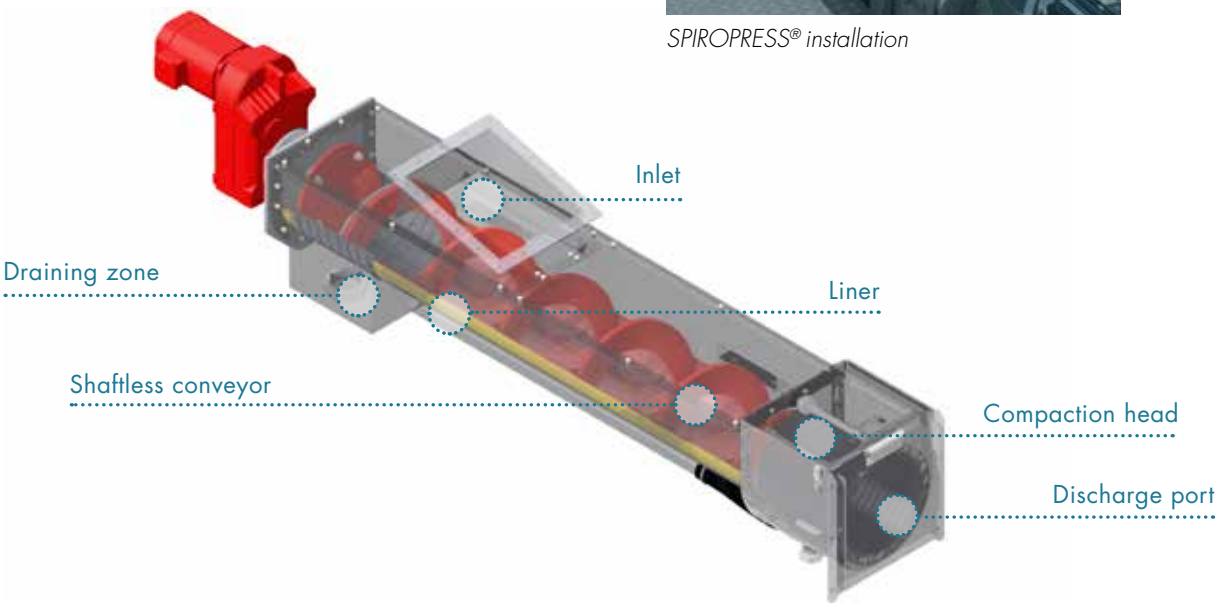

GRIT HANDLING

SPIRAC supplies well proven systems for the removal of grit from wastewater. Systems can be devised using an array of efficient products for separating, washing, conveying and finally storing and transporting grit in a SPIROTAINER®.

SANDSEP®
Grit Classifier

SANDSEP® Grit Classifier is designed to promote settling and extraction of high-density grit particles via a low RPM shaftless spiral. The design of the inlet section reduces turbulence to a minimum and creates an optimum flow pattern for efficient settling. SANDSEP®'s overflow weir arrangement avoids blockage from floating materials. The solids settle in the bottom of the classifier which contains a spiral.

FEATURES AND BENEFITS

- Grit specific gravity (SG) ≤2.65 with an average bulk density (BD) of 1600kg/m³
- Hydraulic capacities from ≤5l/sec. to ≤35l/sec
- Dryness of output product - typical 60% to 80% dry solids (Subject to sparge and wash options - prior to discharge)
- Organic residue; typically, ≤15% with the combined spray bar and sparge tube options
- Shaftless spiral - that do not require a centre-pipe, intermediate or end bearings - thus minimising any potential for undesired blockages
- Low RPM, high torque and low power usage
- Few moving parts - therefore low maintenance and operating cost
- Manufactured in Europe - utilising maximum European content
- Complete aftermarket support available

SANDSEP® installation

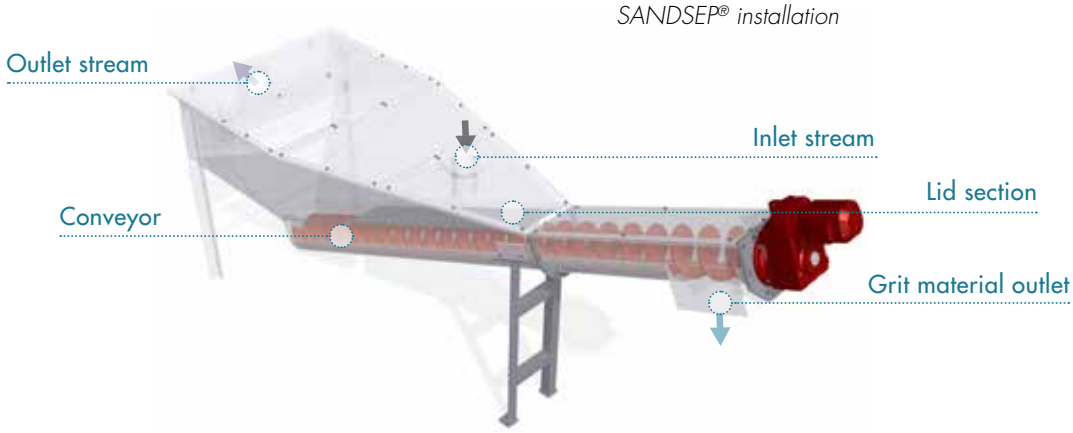

GRIT VORTEX

GRIT SEPARATION CAPTURE SYSTEM

The Grit Vortex from SPIRAC is designed to separate high density grit particles from lower density organics by means of a rotary vortex impeller. Grit particles travel to the perimeter of the round tank and settle into the bottom sump where they are intermittently extracted by means of an airlift blower or grit pump. Organics and larger objects remain suspended and leave the chamber to be processed downstream. The extracted grit slurry is then fed into a grit classifier/washer for dewatering/separation & washing if required.

AIR LIFT SYSTEM

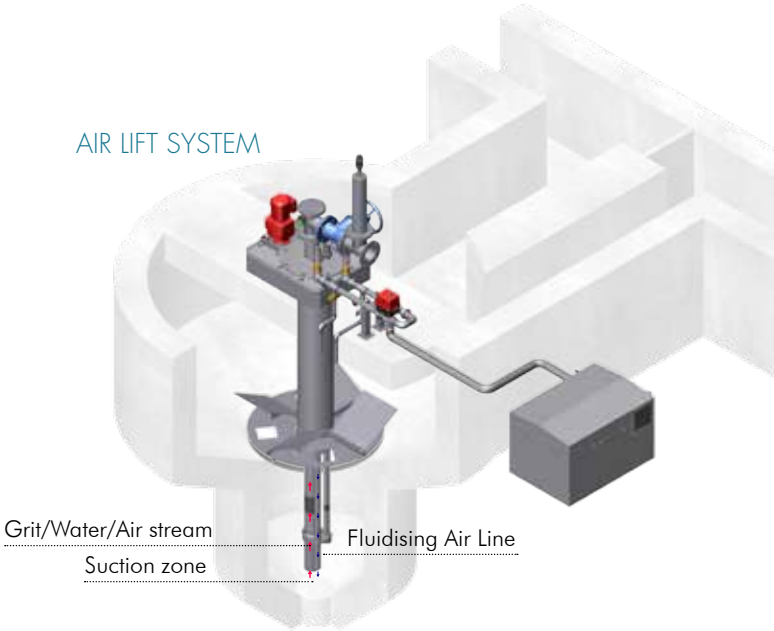

FEATURES AND BENEFITS

- Vortex grit systems are designed to capture/arrest grit or other similar matter; with a specific gravity (SG) ≥ 2.65
- Typical grit particle capture performance;

Part Size	Range	Ave
>0.3mm	92% to 98%	+95%
<0.3mm, >0.2mm	80% to 90%	+85%
<0.2mm, >0.15mm	70% to 80%	+75%

- The settled grit/slurry is then periodically agitated /sparged throughout the day and intermittently extracted with a blower/air-lift system or appropriately selected grit pumps
- Low power requirements
- Manufactured in Europe - utilising maximum European content
- Complete aftermarket support available

SELF-PRIMING GRIT PUMP SYSTEM

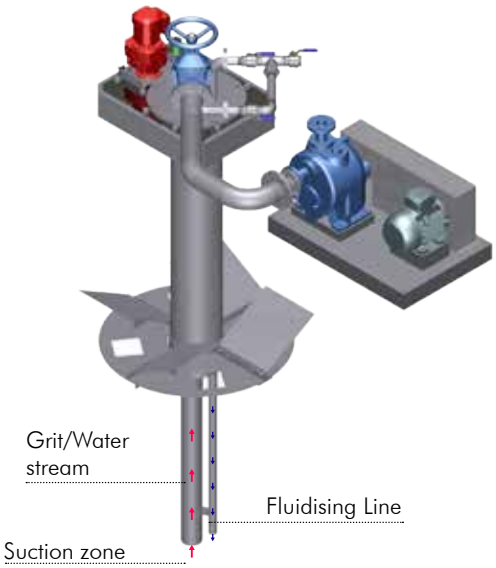

FLOODED SUCTION PUMP SYSTEM

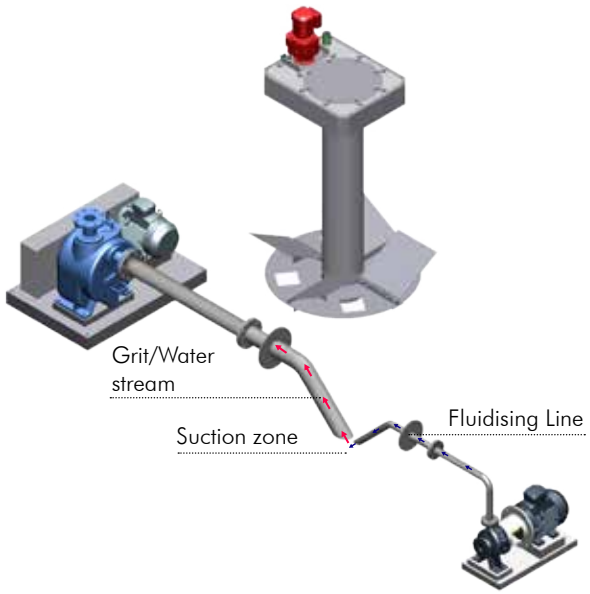

SANDWASH™

GRIT WASHER

SANDWASH™ is designed for those applications where any visible organics on the grit is unacceptable. High organics removal, resulting in a cleaner grit product, less odours and lower waste-cartage fees. Fed from a vortex, aerated grit chamber, detritor tank, or any other means of grit separation either by airlift or grit pump, the SANDWASH™ grit washer utilizes a multi-stage washing process to remove organics and other larger, lower density objects to be returned to the downstream biological treatment.

FEATURES AND BENEFITS

- Available in hydraulic capacities ranging from; 1l/sec to 30l/sec
- Solids handling capacities ranging from; ≤500kg/hr to 2,000kg/hr
- Solids capture and extraction, typically 95% of particles ≥0.2mm Ø. Grit specific gravity (SG) 2.65 with an average bulk density (BD) of 1600kg/m³
- Organic content residue in grit - typically ≤5%
- Dry solids (DS) of washed and dewatered grit - typically 75% to 85%
- Low RPM, high torque, intermittent operation and low power usage
- Few moving parts - therefore low maintenance and operating cost
- Manufactured in Europe - utilising maximum European content
- Complete aftermarket support available

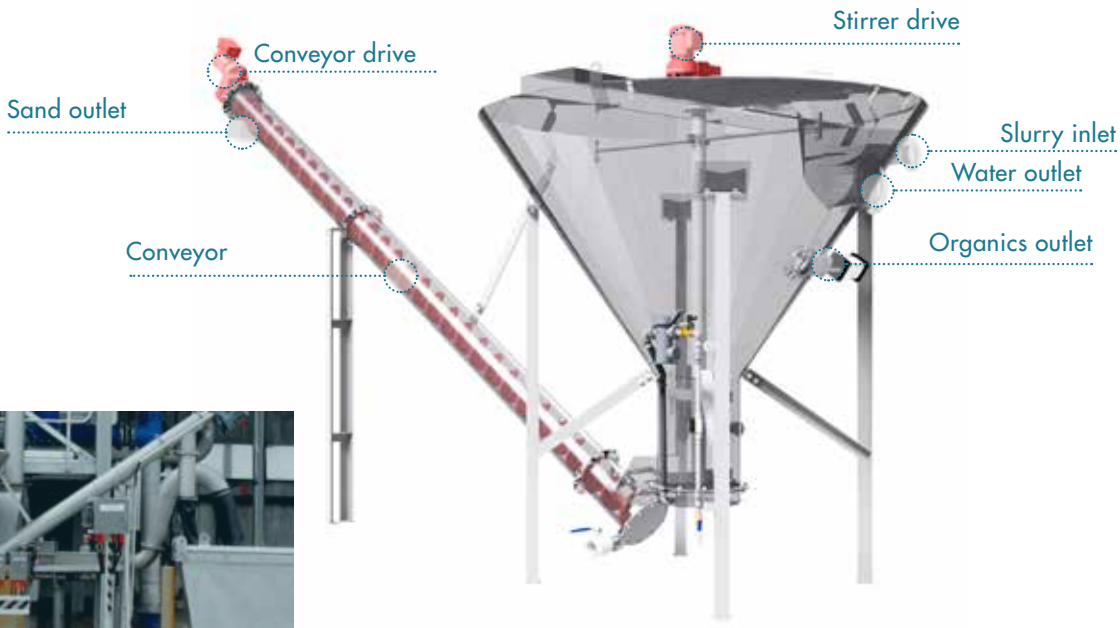

SANDWASH™ installation

STORAGE EQUIPMENT

SPIRAC supplies complete and robust sludge handling systems that are cost effective and low maintenance. Conveyors and storage systems combine the unique spiral technology with highly efficient design.

SPIROTAINER®

AUTO-FILLING CONTAINMENT AND ROAD TRANSPORT BIN SYSTEM

SPIROTAINER® allows offensive waste products to be transported, stored and removed from site with minimal operator intervention, virtually odour, vermin and insect free. A permanent onboard spiral conveyor and control system provides automated filling and level control, while a robust door sealing system ensures leakproof transport even with a large liquefied component.

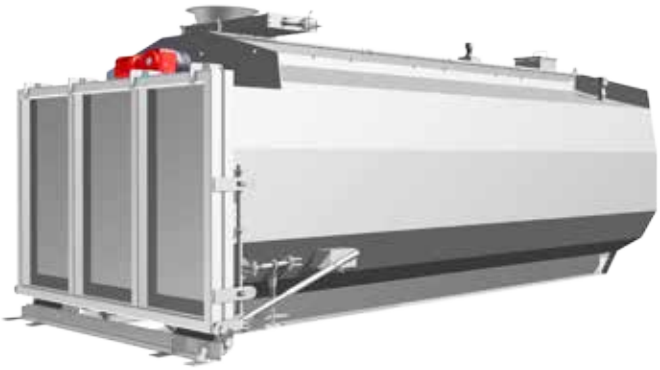

FEATURES AND BENEFITS

- Storage capacity 10m³, 15m³ and 20m³
- Suitable for screenings, grit or sludge
- Deployable outdoors and indoors
- Even load distribution along full length of bin
- Heavy duty closure and locking mechanism with durable rubber gaskets for a positive seal
- Quick-connect power and control sockets
- Ultrasonic level-filling sensors to prevent overfillin
- Robust construction and extreme paint finish suited to the rigors of contract hauling
- SPIROTAINER® eliminates the need for a specialized screenings building
- Extending system capacity is as easy as adding another SPIROTAINER®

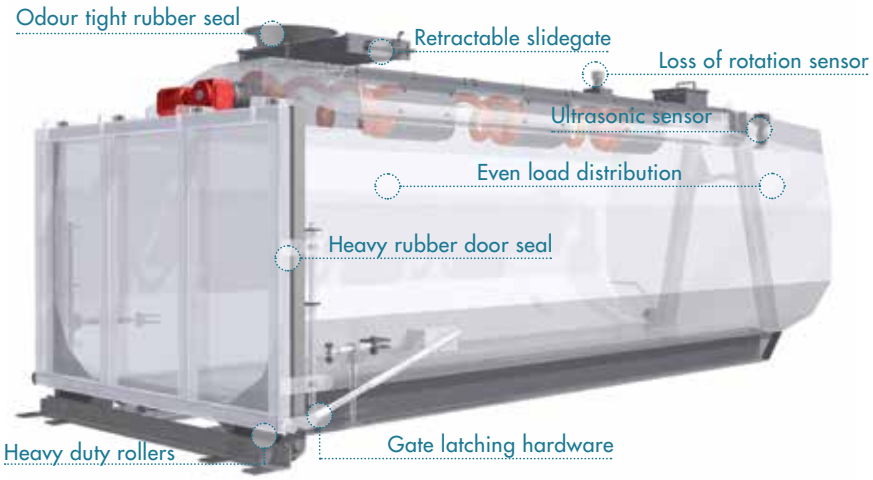

SPIROTAINER® installation

LIVE-BOTTOM SILO

Our live-bottom silos are proven & reliable system with numerous installations world-wide. The silo and hopper systems are custom designed for application in the wastewater industry, especially for the storage, transfer and outloading of dewatered sludges.

While the silos and hoppers follow standardized design features, the sizes and orientations can be customized to suit most customer requirements. These silos are top loaded, typically by shaftless spiral incline or vertical/horizontal conveyors, and outloaded by large diameter/large pitch live-bottom shaftless spirals which guarantee high out loading rates. The live-bottom systems safeguards against bridging, arching, rat-holing or any bottle-neck type losses in material flow ability, even for the stickiest or driest of sludges and/or other difficult products.

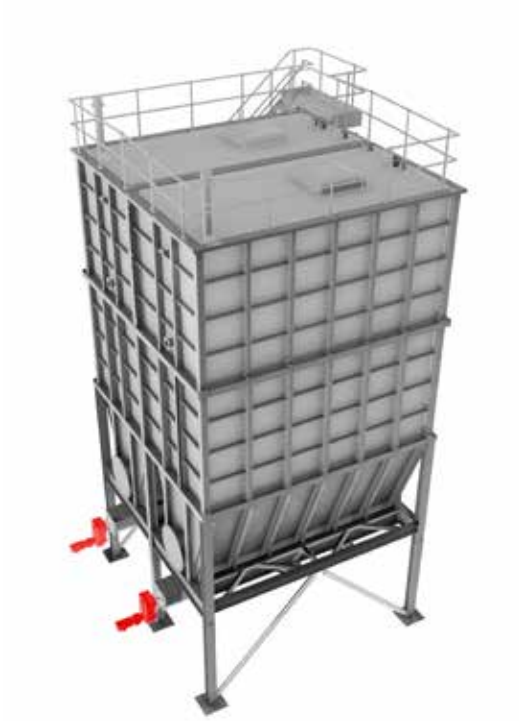

FEATURES AND BENEFITS

- Outloading capacity up to 200m^3/hr
- Available in varying geometries and storage capacities ranging from ≤20m^3 to ≥1,000m^3
- Multiple spirals (typically 2 to 8) form a rectangular bed of moving spirals
- Standalone robust constructions protected with extreme paint finishes to both; internal and external surfaces
- Even load distribution along full the length of the silo/hopper
- Minimal ongoing maintenance over the life of the equipment
- Manufactured in Europe - utilising maximum European content
- Complete aftermarket support available

Live-bottom Silo installation

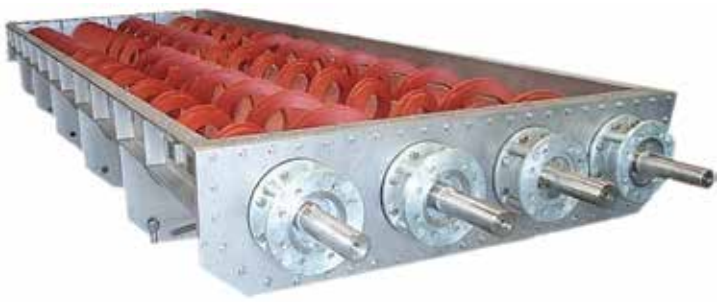

Live-bottom setup with four outloading shaftless spiral conveyors

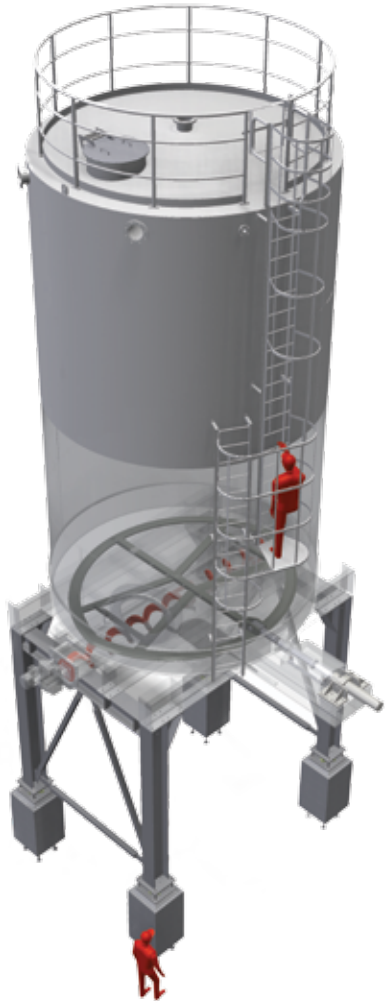

SLIDING-FRAME SILO

A sliding-frame is an extremely efficient extraction system that allows non-free-flowing material to be discharged from a flat bottom silo. It avoids bulky materials blocking the bottom of the silo by forming a bridge of material. The sliding-frame's action breaks any bridges that may form over the extraction spiral and pushes and pulls the material towards the centre of the silo so that it can be discharged.

FEATURES AND BENEFITS

- Round and rectangular sliding-frame outloading capacity up to 250m^3/h. High out loading rates via multiple shaftless spirals, which are manufactured from very durable & abrasion resistant; high tensile micro-alloy steel
- Available in varying geometries and storage capacities ranging from ≤20m^3 to ≥1,000m^3
- Allows for vertical walls and cylindrical silo construction, optimizing volume utilization with capability of reducing height or footprint
- Reliable, quiet and simple operation
- Can be applied to rectangular silos, concrete bunkers, and truck receival bunkers
- Even load distribution along full the length of the silo/hopper
- Minimal ongoing maintenance over the life of the equipment
- Manufactured in Europe - utilising maximum European content
- Complete aftermarket support available

Round Sliding Frame installation

Rectangular Sliding Frame

Round Sliding Frame

COMBIGUARD®

PREFABRICATED INLET WORKS SOLUTION FOR THE REMOVAL OF SCREENINGS AND GRIT

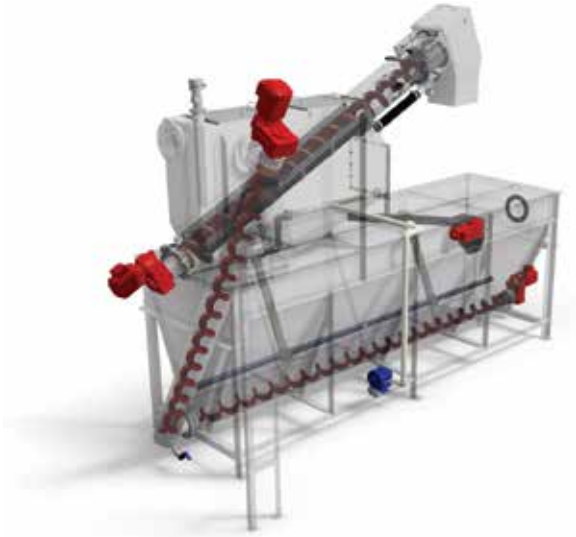

COMBIGUARD® Type 1

Type 1: SPIROGUARD® with or without Manual Bar Screen by-pass and a SAL (Rectangular tank with horizontal & incline conveyors).

COMBIGUARD® Type 1 installation

COMBIGUARD® Type 2

Type 2: We offer a wide range of equipment combinations, and screens enabling this type of COMBIGUARD® to be adapted to any requested flow requirement.

COMBIGUARD® Type 2 installation

FEATURES AND BENEFITS

- COMBIGUARD® Type 1 capacity is up to 160l/sec and Type 2 can be adapted to any flow
- A complete screening and grit system
- Designs and layout able to be customised to suit client-specific requirements. Space-saving solution for facilities requiring low equipment footprint
- Lower capital cost, power consumption and wash-water usage
- A prefabricated solution that requires greatly reduced installation time on site
- SPIRAC technology with few moving parts, meaning lower maintenance and down time
- Simple and reliable operation due to low head loss. Effective operation across a wide flow

SPIRAC®
Solid Handling Solutions

Please contact us for more information

NETHERLANDS	SWEDEN	UNITED KINGDOM
SPIRAC BV	SPIRAC AB	SPIRAC Limited
Phone: +31 (0) 495 430 203	Phone: +46 40 36 22 00	Phone: +44 (1) 295 270 335
Email: info@spirac.nl	Email: info@spirac.se	Email: conveyors@spirac.co.uk
Address: Den Engelsman 16a, 6026 RB Maarheeze	Address: Krossverksgatan 8, SE-216 16, Limhamn	Address: SPIRAC House, Thorpe Mead, Thorpe Way Industrial Estate, OX16 4AB, Banbury